PROJECT: ……

CONTRACTOR: …… **DATE:** ……

Safety Check: Before proceeding, ensure **Appropriate Personnel Protection** equipment is used. If in doubt ask your Supervisor.

This is a recommended Work Method Statement for the erection and dismantling of the CS 240L Climbing Bracket system.

Safety Warning

- The use and application of the CS 240L Climbing Bracket System must be in accordance with AS 3610, Occupational Health and Safety regulations, Approved Industry Codes of Practice, Relevant Regulatory Requirements.
- It is recommended that users of the CS 240L Climbing Bracket system employ and implement appropriate procedures and controls measures to eliminate or control any risk of Musculoskeletal disorder/injury while manually handling Acrowall panels And Coreform components.

Preliminary Activities

1. Transport formwork items to a nominated clear and accessible area as near to the work face as possible to reduce the handling time of heavy components.
2. The area on each side of the walls to be constructed and the area the used to assemble the climbing bracket must be cleared of all debris to assist in accurate placing of the formwork.

General Description

The CS 240L Climbing Bracket system is based on the use of a conventional formwork face form which is supported and handled by means of the CS 240L climbing bracket.

The climbing bracket acts as the vehicle to support, strip and align the face formwork and to position it in place for the next pour.

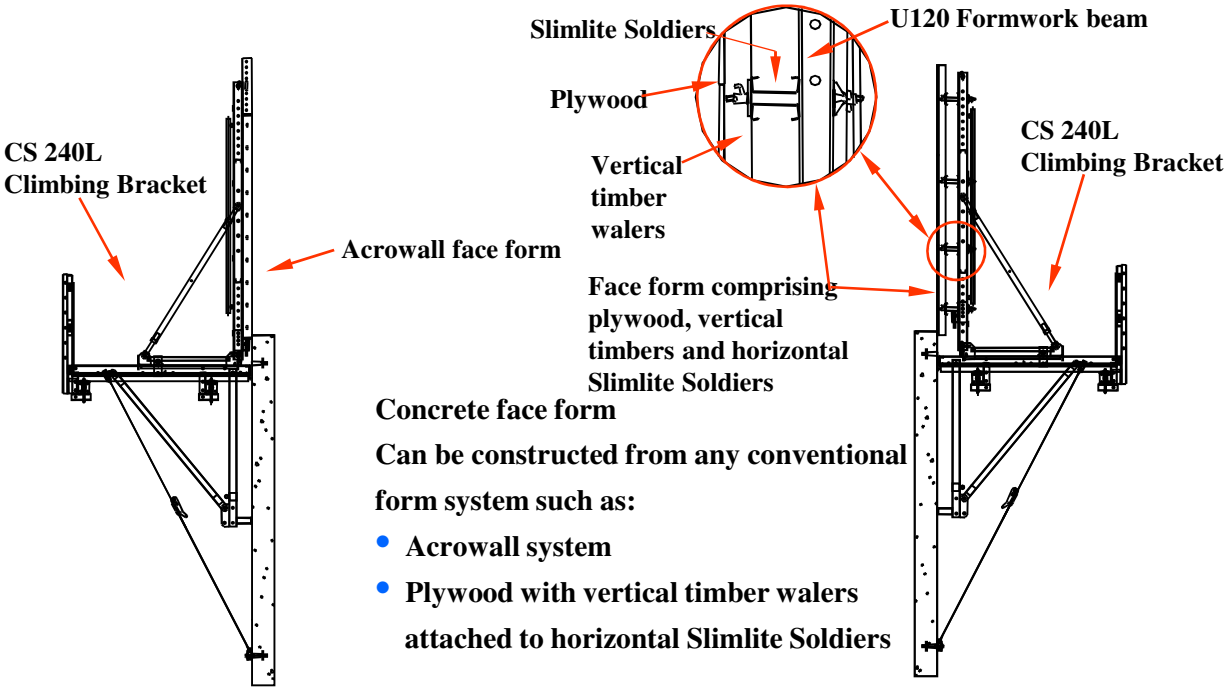

Concrete face form

Can be constructed from any conventional form system such as:

- **Acrowall system**
- **Plywood with vertical timber walers attached to horizontal Slimlite Soldiers**

Location of components

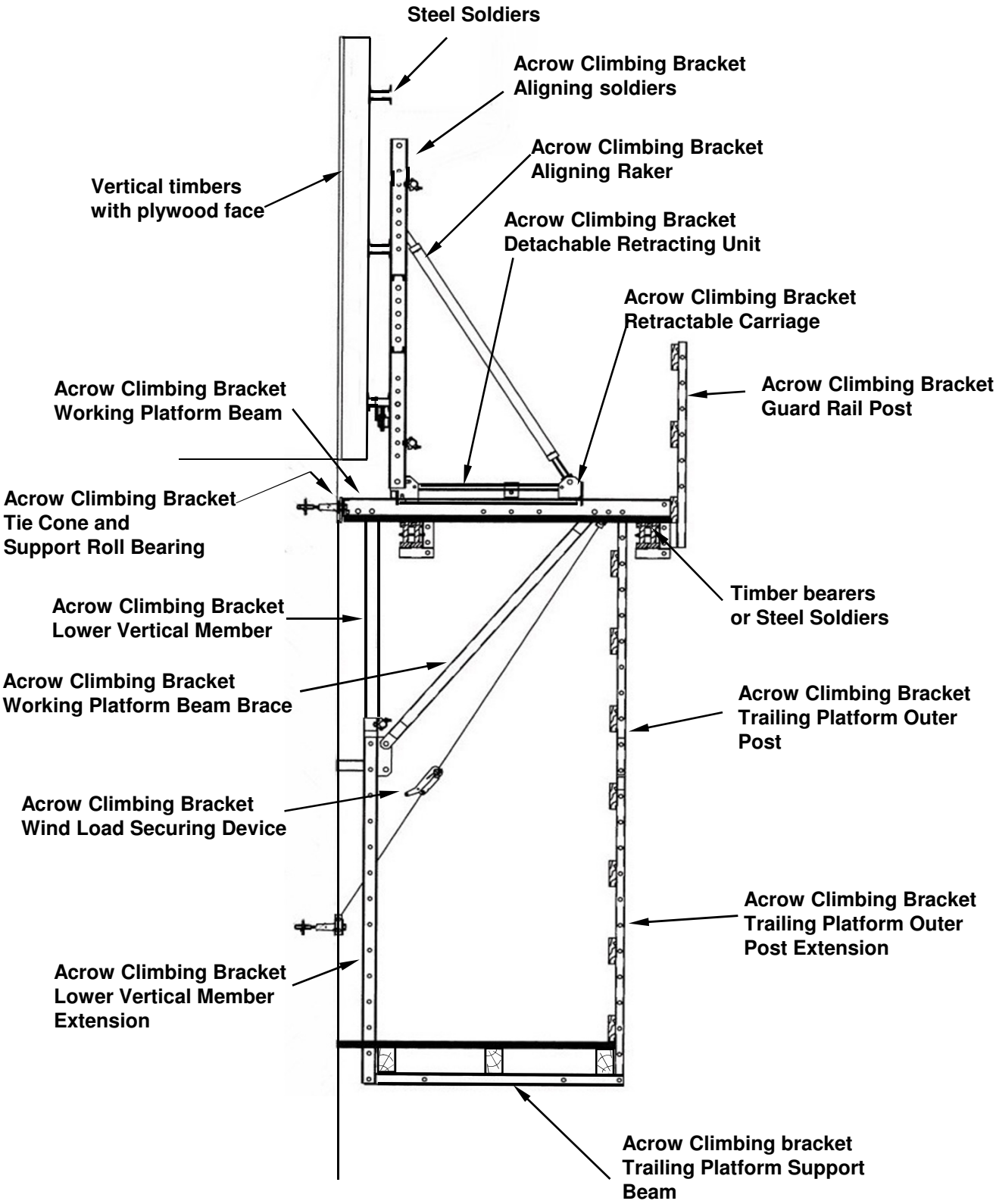

Assembling the CS 240L Climbing Bracket System

Stages of assembly
- Assembling the Working Platform base
- Assembling the bracket components to the working platform

Erection of climbing bracket
- Placing climbing bracket unit on 1st pour anchors
- Attaching the face form to the climbing bracket

Continuing use of the system
- Lifting climbing bracket and face form assembly to next pour position
- Attaching the trailing platform

Important aspect of the system

The climbing bracket locates on preset anchors in the previous pour, it is therefore critical that the centre of the anchor positions in the face form and the centre of the working platform beams be perfectly in alignment with each other. Extreme care must be taken to set their positions accurately in their initial erection stage and to be precise in setting their alignment when attaching the face formwork to the climbing bracket after the 1st pour. (In the 1st pour the face form is used on its own and sets the anchor in place for the future attachment of the climbing bracket.

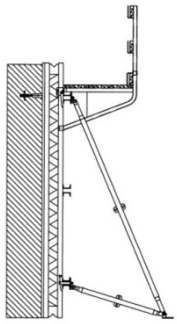

1st Pour

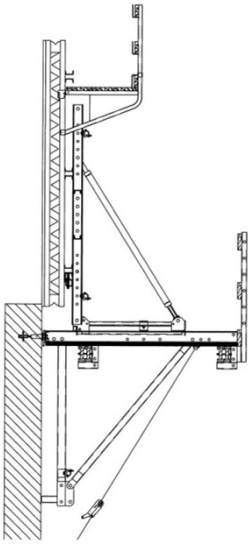

2nd Pour

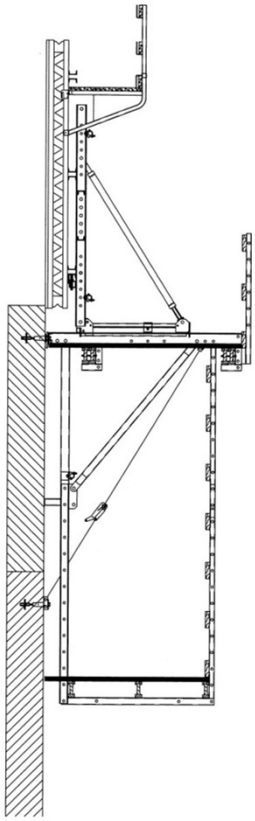

3rd Pour and progressive pours thereafter

Assembling the Working Platform Base

1. The Working Platform Beam, Retracting Carriage and the Detachable Retracting Unit are assembled together to form working platform beam units.
   2 Working Platform Beams units are to be positioned the exact distance apart shown on the drawing. To achieve this it is recommended that they be positioned on a flat nail-able surface such as a sheet of plywood (or 2 sheets of plywood depending on the distance apart the beams are). A timber template is setup containing 2 Support Roll Bearings set the correct distance apart. This template is then attached to the Working Platform Beam units to ensure they will be the correct distance apart in the final assembly. Timber cleats are nailed into the plywood to hold the beam units in place during the attachment of the other components of the working platform.

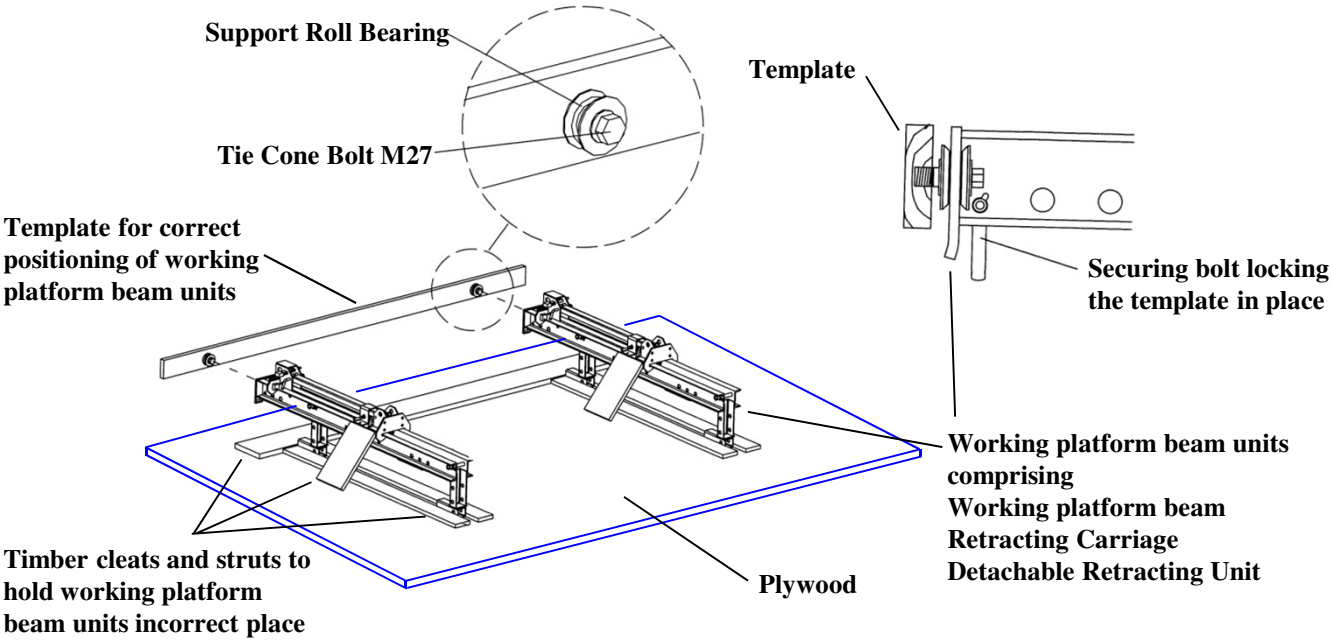

2. Longitudinal beams are attached to the underside of working platform beams and are securely fastened in place. This assembly becomes the main structure of the Working Platform Base.

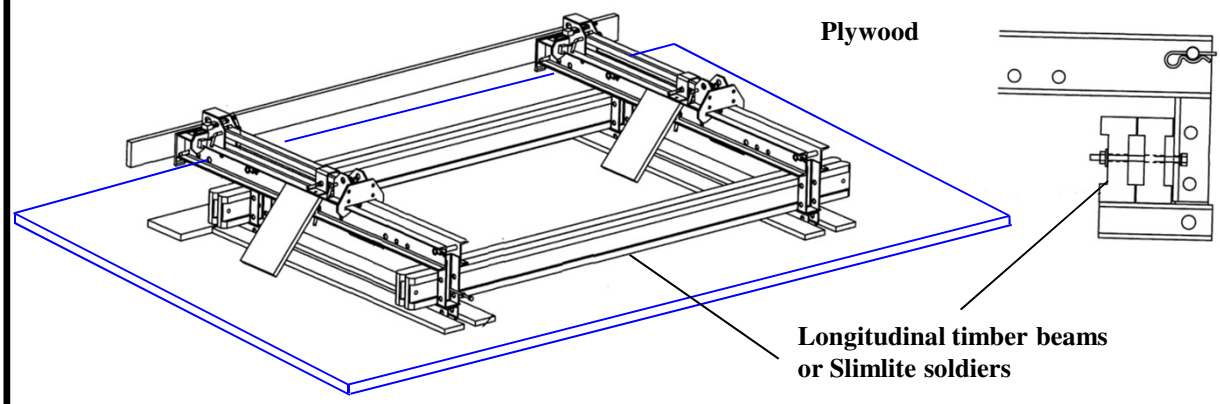

Assembling the Working Platform continued

3. Transverse planks are laid and secured across the longitudinal beams to form the decking. Guardrail posts are inserted into the end gaps in the working platform beams. If the distance between the beams is greater than 2.4m then a centre guardrail post must be attached. This is achieved by using a multiple clamp which clamps over the end of a transverse plank and when secured in place a combi-post is inserted into it.

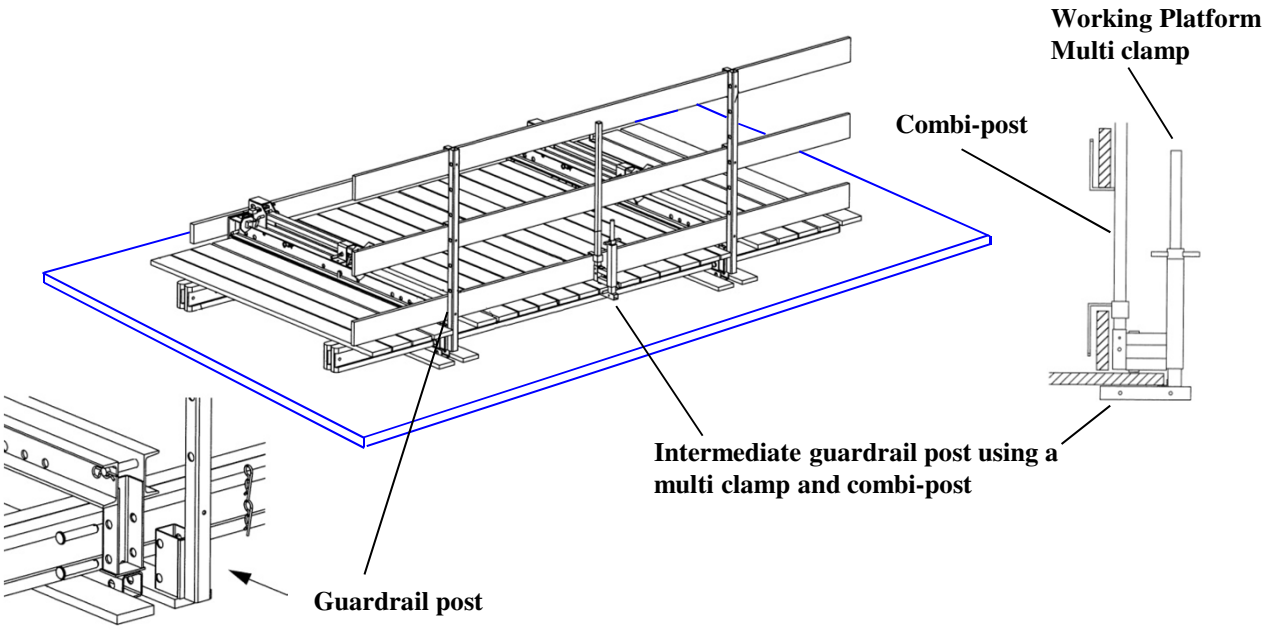

4. Guardrail posts are then added to the ends of the platform to form the transverse returns using the multiple clamps securing to the longitudinal beams.
Aligning Raker is then connected to the end of the move-off carriage of each platform beam unit and the end of it is tied to the top rail of the guardrail to prevent it from moving around during later transporting of the platform.

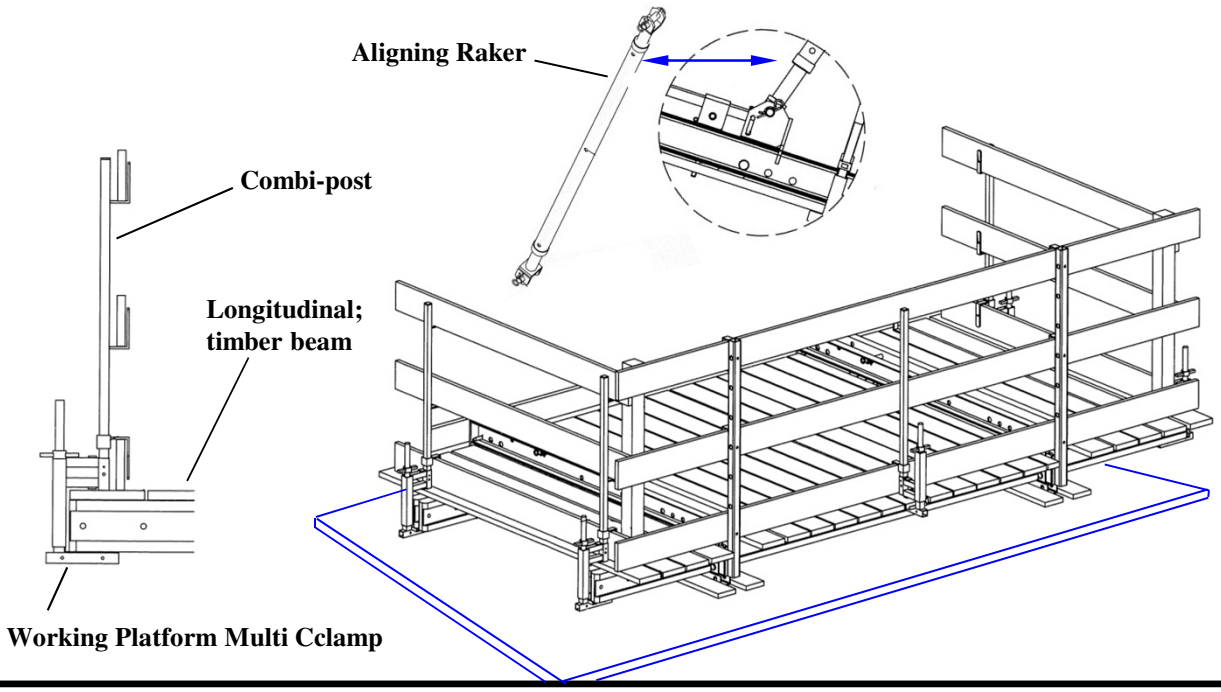

Assembling the Working Platform continued

5. After assembly of the platform, the under platform components are added. This is achieved by attaching crane slings to the front pickup points on the platform and tilting the platform at an angle of approximately 45º. Ensuring the unit is chocked at the rear pivot point of the platform to prevent movement while assembling the components, connect the Lower Vertical Member, Working Platform Beam Brace and the longitudinal tying tube.

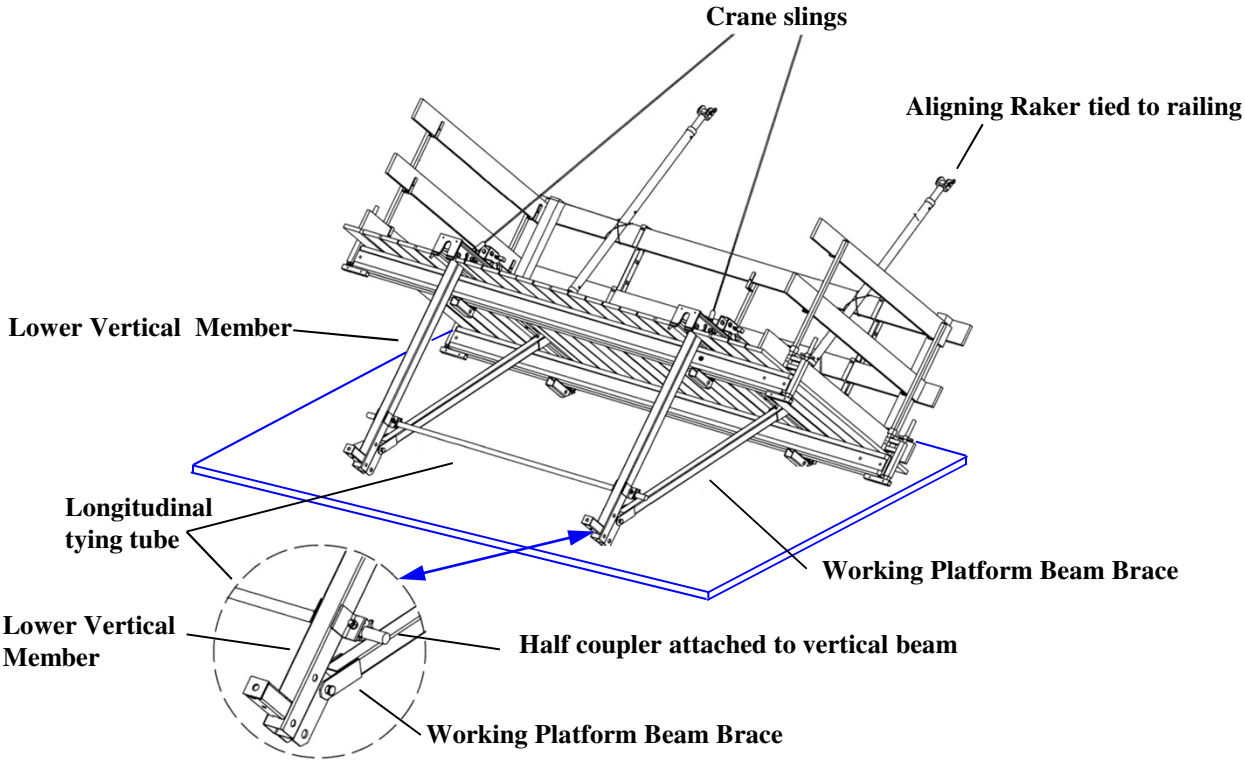

6. Connect additional crane slings to the rear pickup points on the platform and the Climbing Bracket Assembly is then ready for transportation to its position to support the formwork for the 2nd pour.

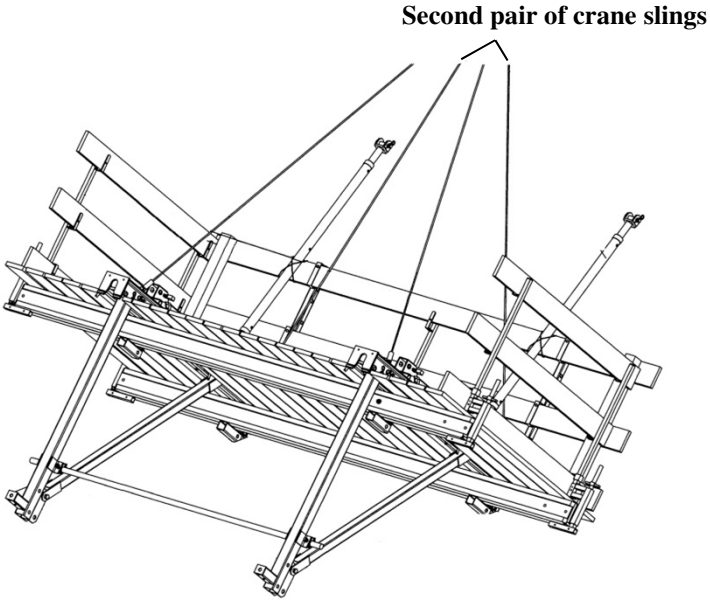

Positioning the Climbing Bracket assembly

1. After the 1st pour is completed and the form panels removed the Climbing Bracket Assembly is lifted into position by the crane. Prior to lifting the form in position the Bracket Bearing Rolls must be secured by fit bolts to the tie cones that had been set into the top of the 1st pour.
   The Climbing Bracket Assembly is lifted into position and lowered down until the ends of the working platform beams slide down over the Support Roll Bearings. When securely in place and the Support Roll Bearings are supporting the ends of the working platform beams the securing bolt is passed through the end of the working platform beam preventing the Climbing Bracket Assembly from lifting off the rolls. The crane can then be removed.

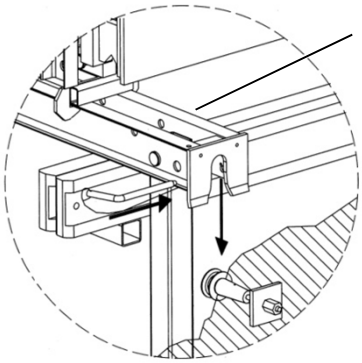

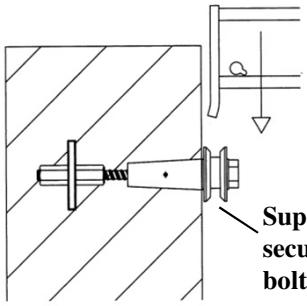

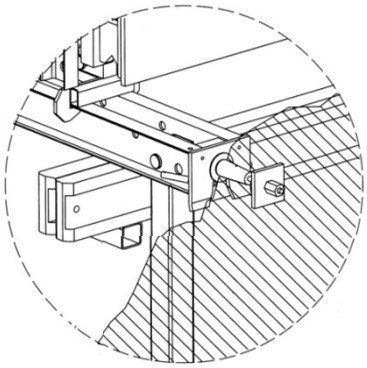

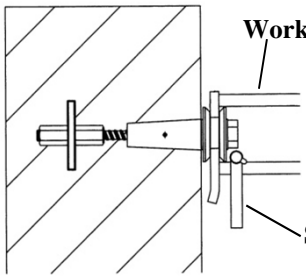

Platform beam locked in place over Support Roll Bearing

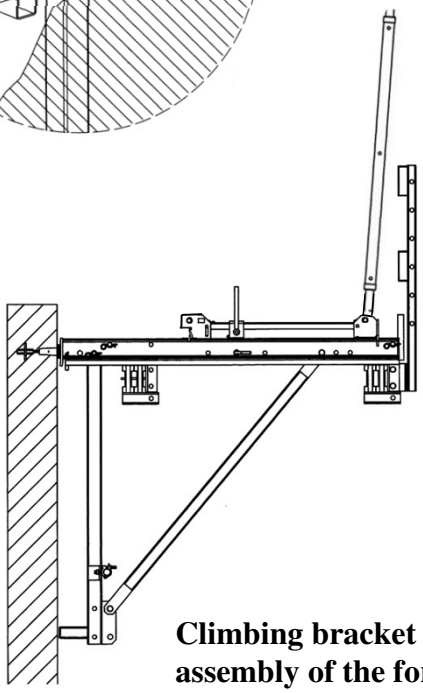

Climbing bracket in place ready for assembly of the formwork beam

Assembling the Formwork Beam and Levelling Adaptor

1. When the Climbing Bracket Assembly is locked in place at the top of the 1st pour the components to accept the formwork are added to it. An Aligning Soldier is connected to the front of the Retracting Carriage on each Working Platform Beam unit using a pin and R clip. To complete the formwork support structure, attach the end of the Aligning Raker to the top of the Aligning Soldier using a bolt and R clip.

2. Attach the Levelling Adaptor to the Aligning Soldier to provide the support for the vertical formwork using pin and R clip. Care must be taken to determine the exact position required before attaching the levelling adaptor.
   The climbing bracket is then ready for the attachment of the vertical form.

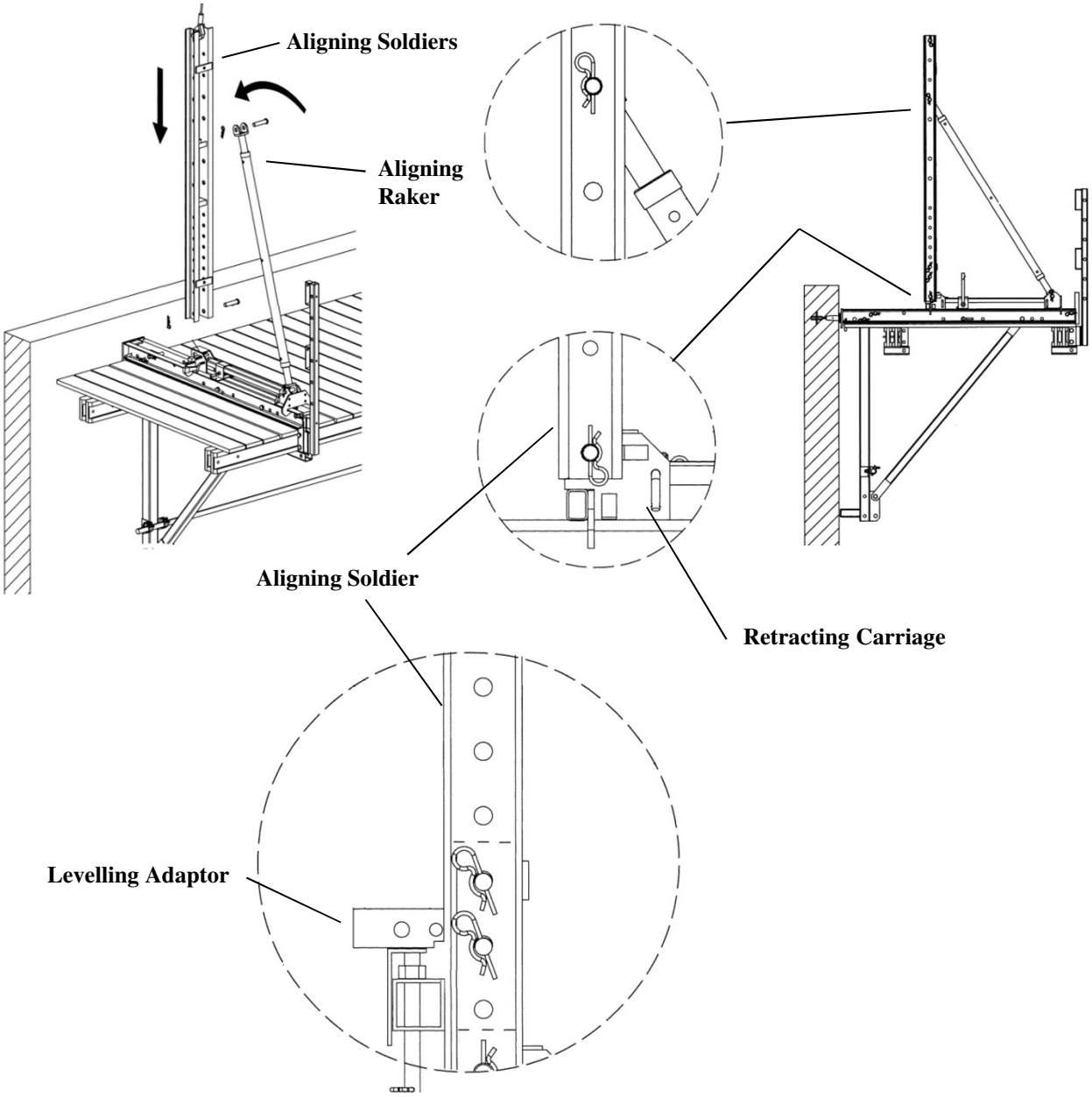

Attaching the Vertical Formwork

1 **Attaching vertical form comprising plywood face supported by vertical timber and horizontal Slimlite soldiers**.
Lift form in place using crane. Lower form until the bottom horizontal Slimlite Soldier sits on top of the levelling adaptor. Secure the Slimlite soldiers to the Aligning Soldier using thru-tie bar, washers and wingnuts

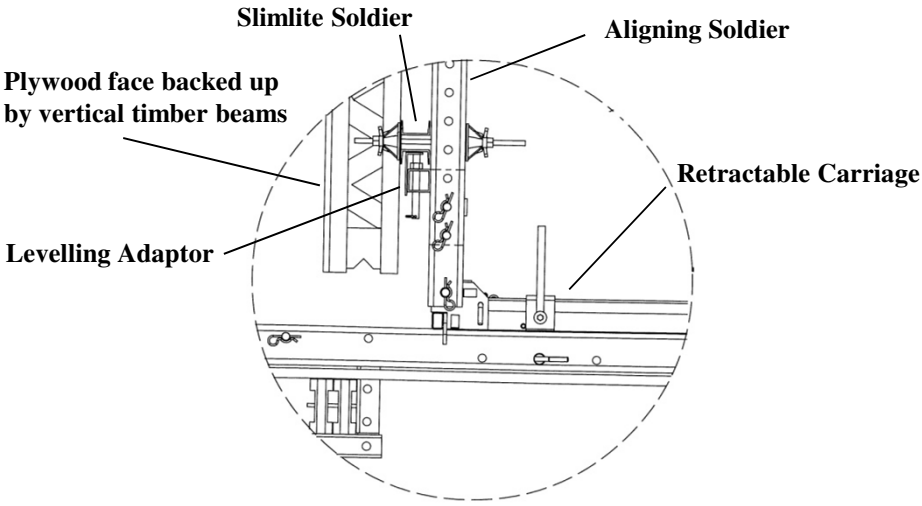

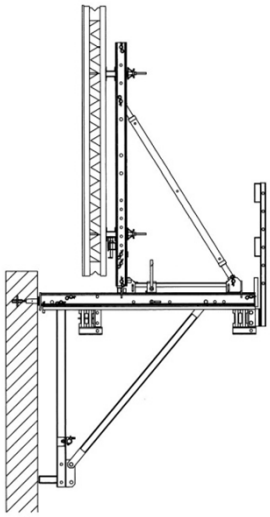

2. Attaching vertical form comprising Acrowall panels
Lift form in place using crane. Lower form until bottom of panels sit on top of the levelling adaptor. Secure the panels to the formwork beam using Acrowall waler connectors with washers and wingnuts.

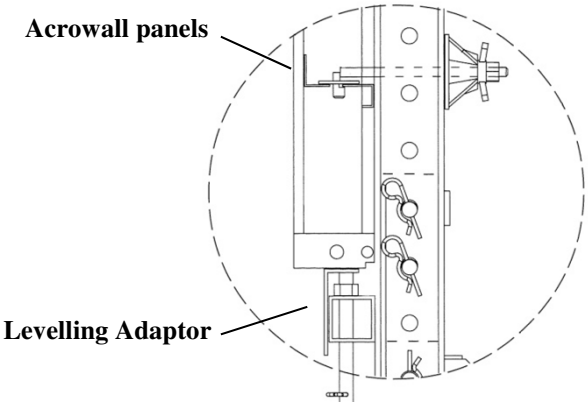

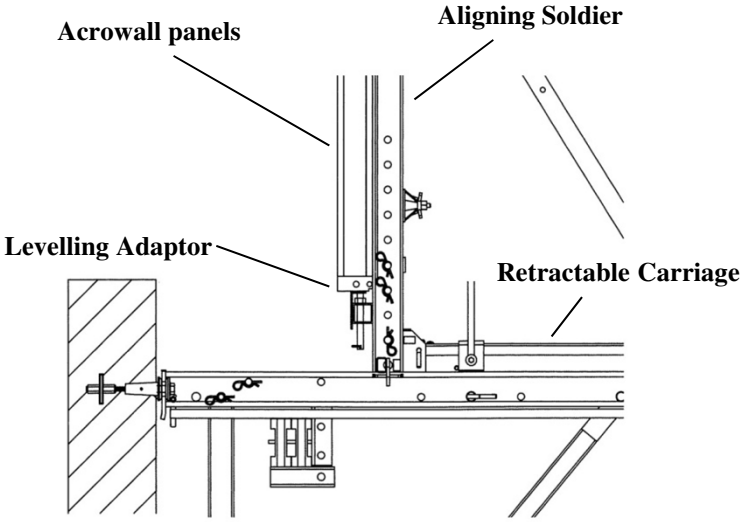

Installing Bracing

1. Longitudinal and diagonal bracing of the two Aligning Soldiers must be done to ensure rigidity of the form when moved backwards and forwards on the move-off carriage. This is achieved by fixing 2 half couplers to each Aligning Soldier, a longitudinal tube is then connected at the top and bottom of the Aligning soldiers and a diagonal bracing tube is connected between these tubes.

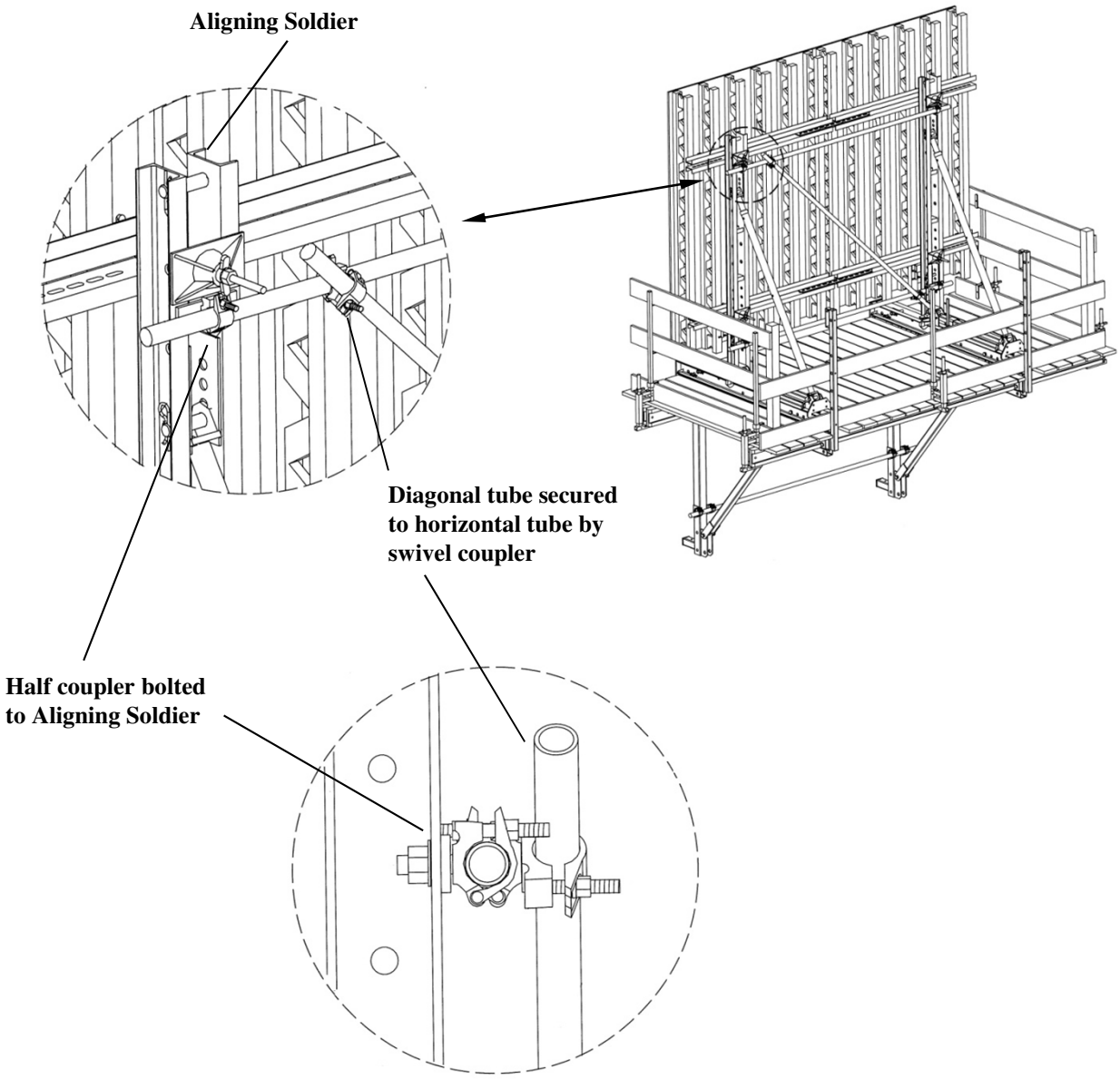

Attaching the trailing Platform

1. Whilst the climbing bracket assembly is in the 2nd pour position components of the trailing platform can be attached so that when the bracket is lifted to the 3rd pour position the completion of the trailing platform can be easily carried out.

2. On each Lower Vertical Member attach a Lower Vertical Member Extension to its lower end using the second pin only.
   Attach a Trailing Platform Outer Post to each working platform beam and connect a Trailing Platform Outer Post Extension to it using the top hole in the extension and the second last hole in the suspension profile.

3. Construct the trailing platform unit using 2 Trailing Platform Support Beams as the transverse members with 3 timber beams as the longitudinal members. Complete the platform with transverse planks and end guardrails made with multiple clamps and combi-posts.

4. Attach the end of the Lower Vertical Member Extension to the end of the Trailing Platform Support Beam.

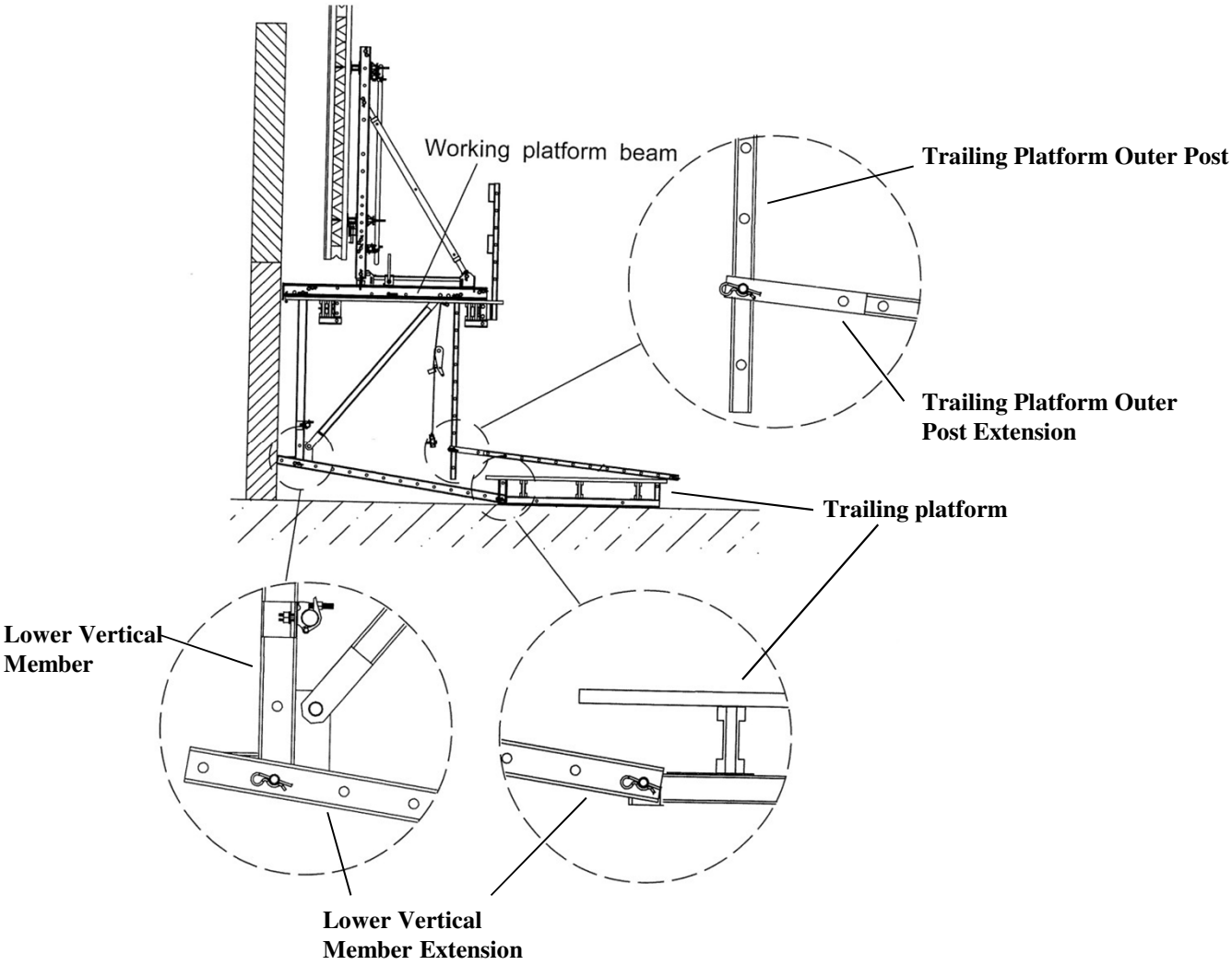

Mounting the trailing platform continued

5. When the bracket is lifted to be repositioned for the 3rd pour the Lower Vertical Member Extension will straighten out until it is in a true vertical position, it should then be locked by inserting a locking pin in the top hole. When the Lower Vertical Member Extension is locked the Trailing Platform Outer Post Extension can be attached to the outside end of the Trailing Platform Support Beam. The second locating pin in the Trailing Platform Outer Post Extension must then be inserted and locked by springs clips before further lifting by the crane.

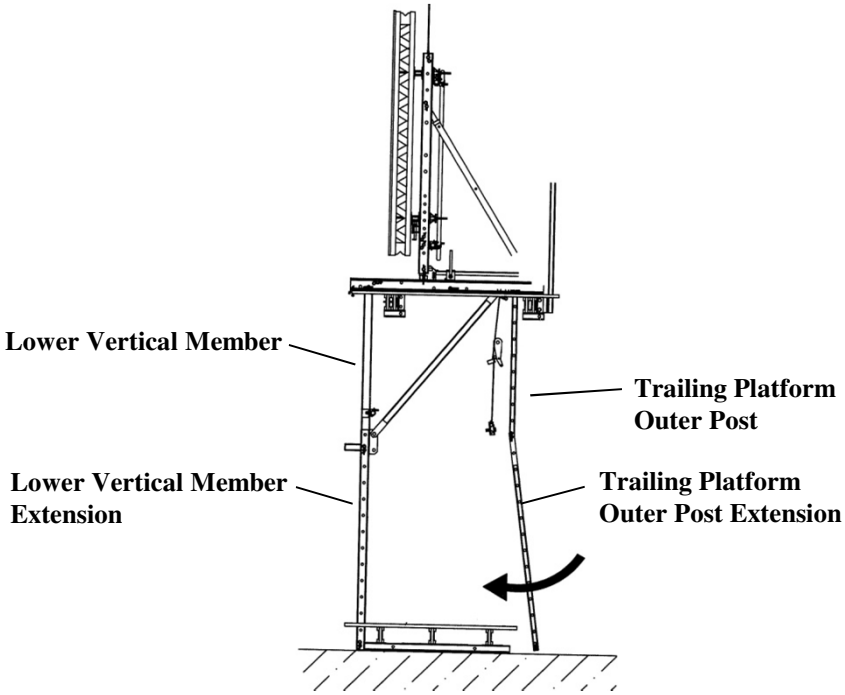

Climbing bracket assembly lifted until Lower Vertical Member Extension is vertical. Move Trailing platform Outer Post Extension inwards and connect to Trailing Platform Support Beam. Connect all locking pins before further lifting of crane.

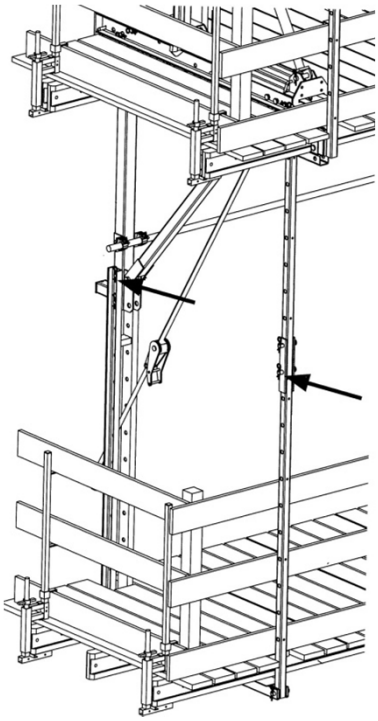

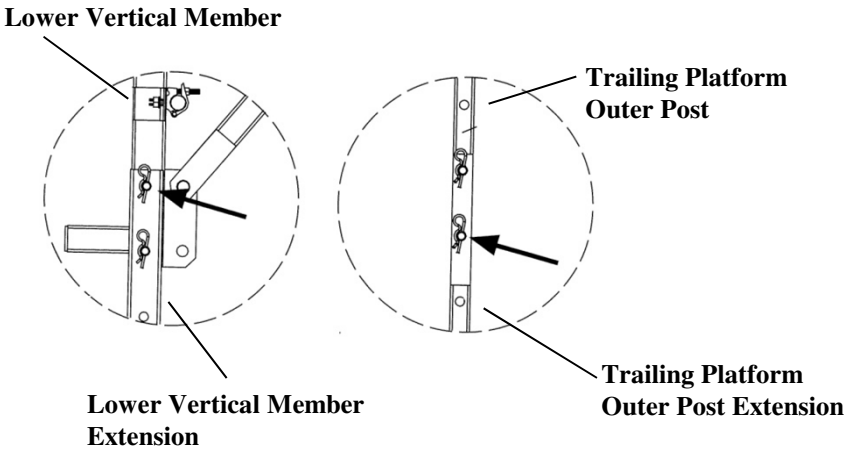

Positioning of anchors and attachment of wind load securing device

1. **Position of support anchors**
   Supporting anchor must be positioned 450 mm from top of pour for plywood and timber beam construction and 480 mm from top of pour for Acrowall form.

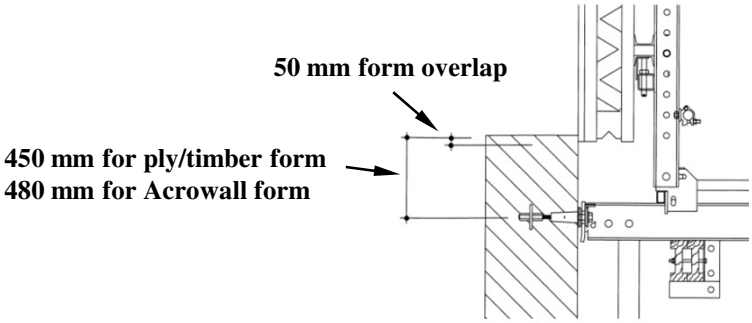

2. **Attachment of wind load securing device**
   The Wind Load Securing Device attaches to the outer end of the Working Platform Beam and the anchor point of the previous pour. The device features webbing straps with attachment brackets at each end and an adjustment ratchet tightener centrally located.

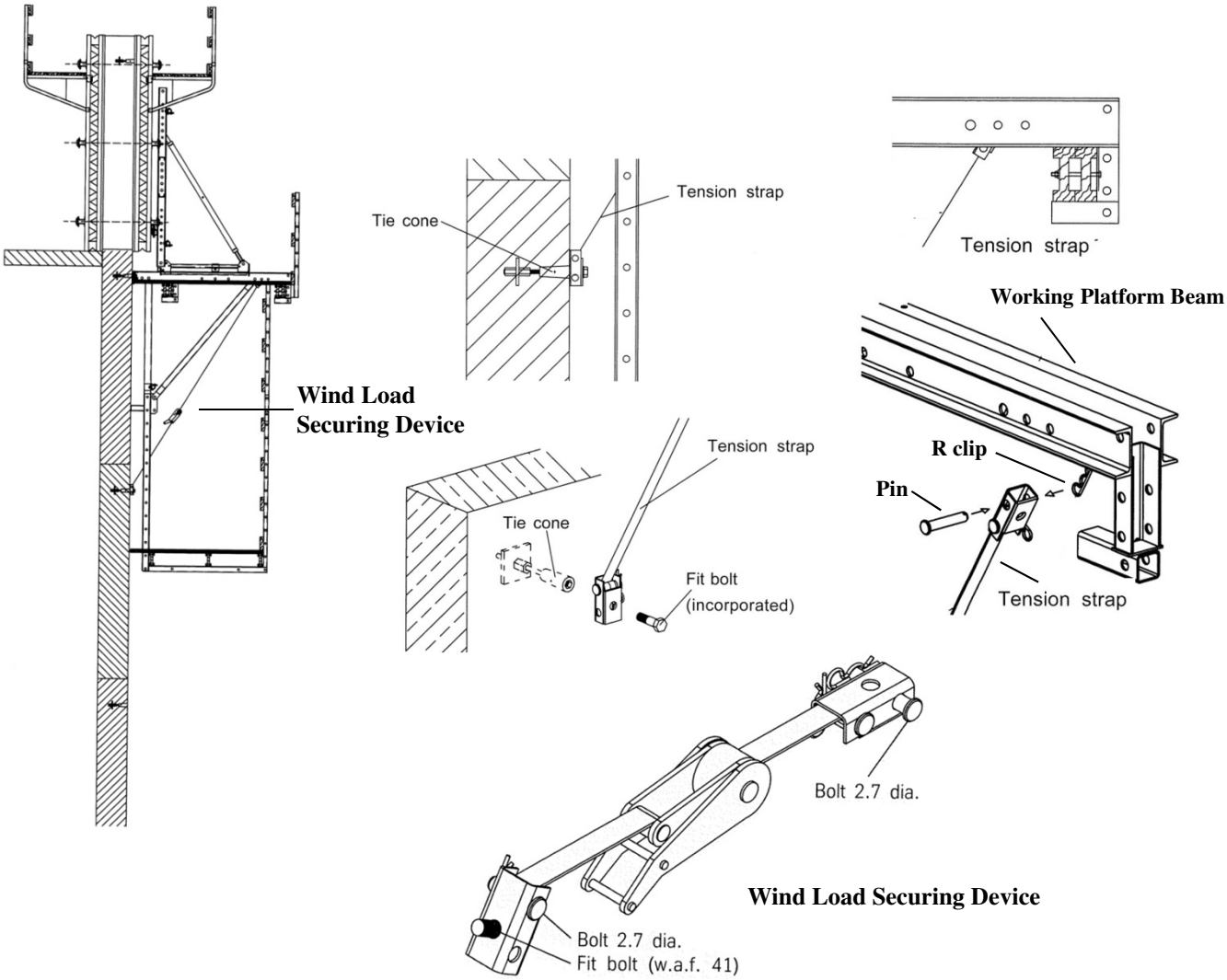

Dismantling Form and Climbing bracket on completion of project

Dismantling the form

1. Before attaching the crane ensure the locking pins on the working platform beams securing the beams to the bracket bearing rolls are in place and secure.

2. Ensure all connections between elements of the form are in place and are tight.

3. Ensure a clear area exists for placement of the form after removal from the bracket.

4. Move form away from concrete face using the Retractable Carriage

5. Attach crane to the lifting points at the end of each Aligning Soldier.

6. With the crane supporting the weight of the form remove the pins securing the Aligning Rakers to the Aligning Soldiers. Move Aligning Rakers back and secure to guardrail.

7. Remove pin securing the Aligning Soldier to the Retractable Carriage. The form is now ready for the crane to lift it clear.

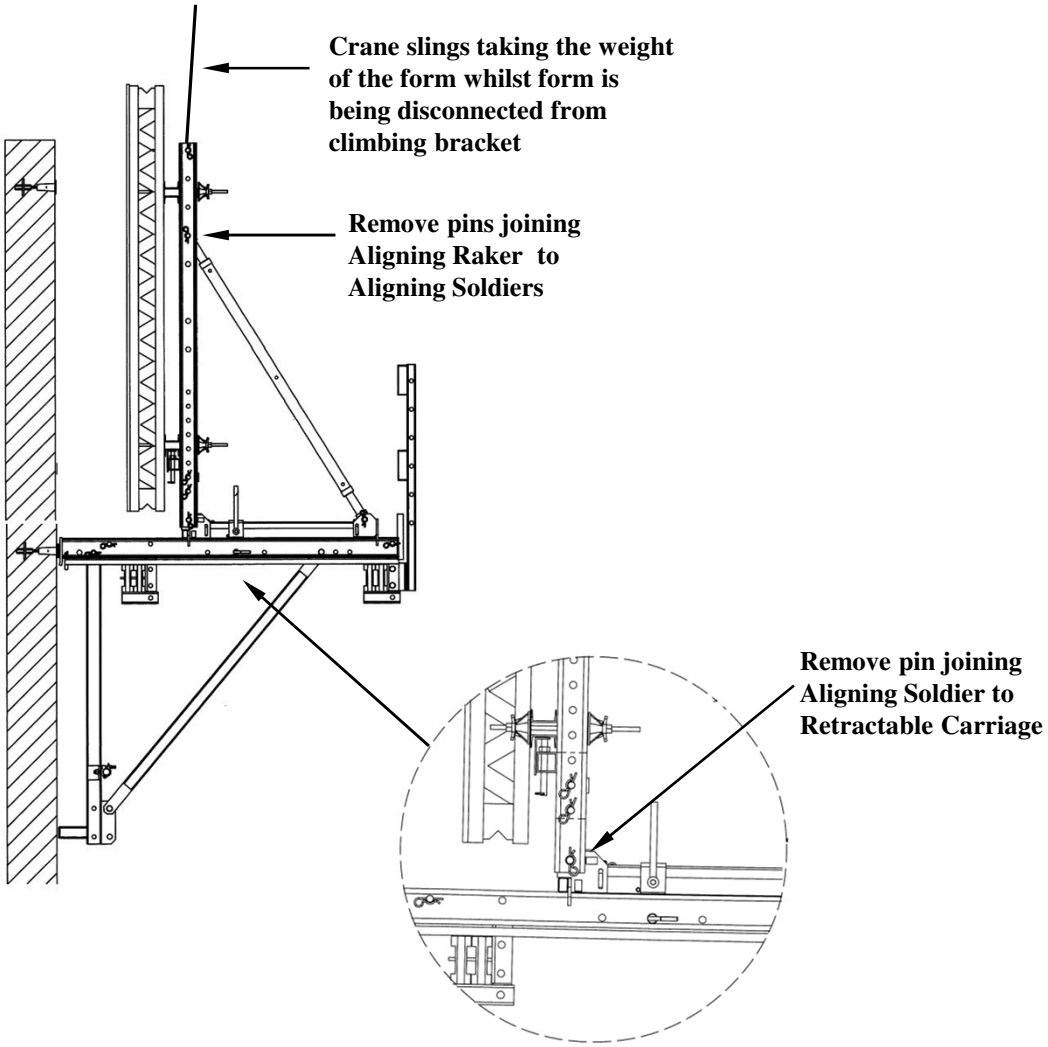

Dismantling the Climbing Bracket from the concrete face

1. Ensure all loose material is removed from both working decks and ensure all components are securely attached.

2.. From the Trailing platform detach the Wind Load Securing Devices from the wall and secure it to the Trailing Platform Outer Post. See Fig A.

3. Remove steel cone from concrete wall.

4. Secure 2 crane slings to each Working Platform Beam, one at front and one at rear. See Fig A

5. Remove locking pins securing Working Platform Beams to the Support Roll Bearing.

6. Lift Climbing Bracket assembly vertically until it disengages from the Support Roll Bearing then move to dismantling area.

7. At the dismantling area lower the assembly until the trailing platform touches the ground. The securing pins connecting the Lower Vertical member Extensions and the Trailing Platform Outer Post Extensions will now be assessable and can be removed leaving the lower part of the trailing platform on the ground when the crane moves the top assembly away. See Fig B.

8. The crane moves the remaining assembly to a new spot in the dismantling area and lowers the assembly to allow the Trailing Platform Outer Posts to be removed. See Fig C.

9. The remaining assembly can then be lowered to the ground for final dismantling. See Fig D.

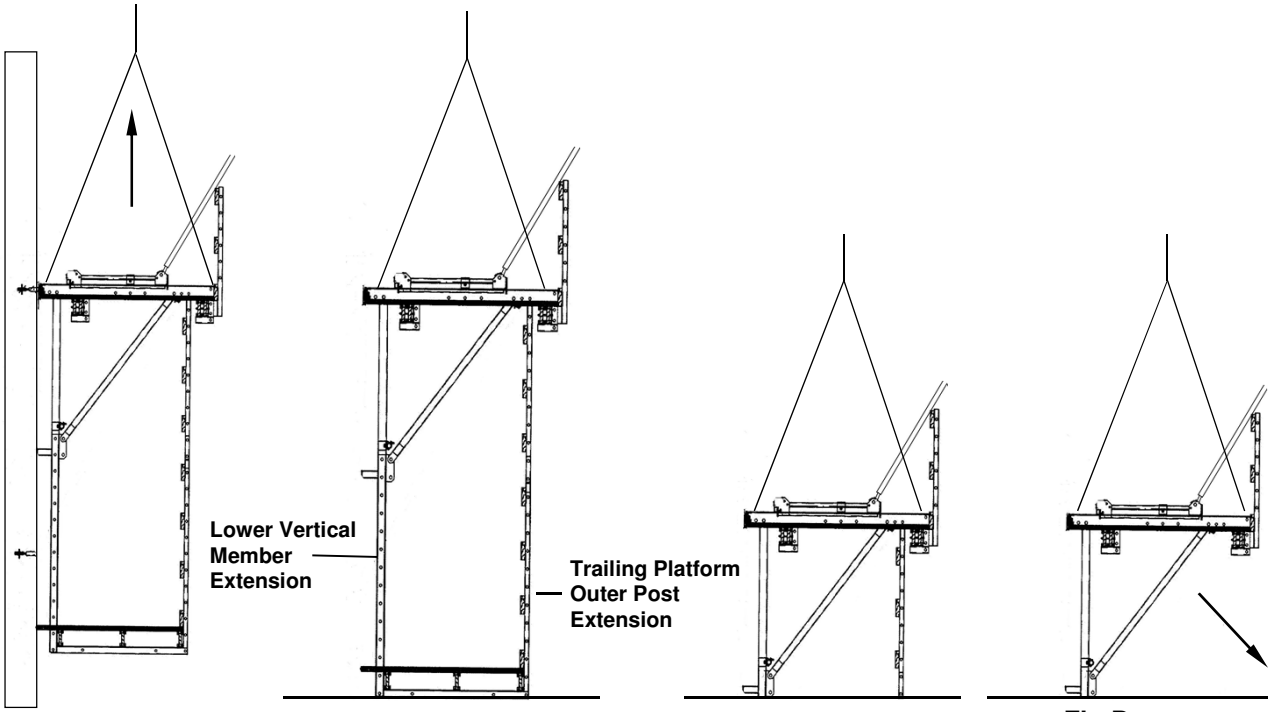

Fig A Fig B Fig C Fig D